12 PRO MAX mmW 5G

SMB Modo Comparador:
Calibração: 4.02V/ 2.76mA

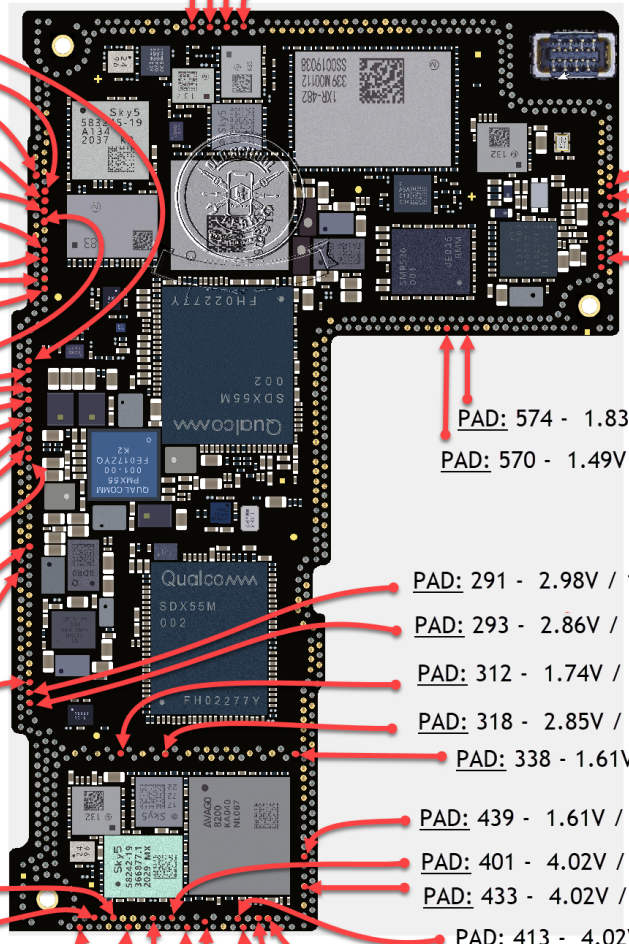

PAD: 128 - 1.74V / 0.04mA

PAD: 125 - 4.02V / 2.76mA

PAD: 122 - 1.75V / 0.04mA

PAD: 119 - 1.07V / 0.00mA

PAD: 223 - 3.35V / 1.81mA

PAD: 188 - 1.50V / 0.00mA

PAD: 185 - 2.48V / 0.84mA
flutuante

PAD: 190 - 1.50V / 0.00mA

PAD: 192 - 1.50V / 0.00mA

PAD: 200 - 3.12V / 1.54mA

PAD: 202 - 3.12V / 1.54mA

PAD: 206 - 3.64V / 2.17mA

PAD: 208 - 3.64V / 2.17mA

PAD: 194 - 1.50V / 0.00mA

PAD: 225 - 3.36V / 1.82mA

PAD: 229 - 3.09V / 1.50mA

PAD: 231 - 3.09V / 1.50mA

PAD: 235 - 0.00V / 0.00mA

PAD: 237 - 0.00V / 0.00mA

PAD: 241 - 3.15V / 1.59mA

PAD: 243 - 3.15V / 1.59mA

PAD: 261 - 2.47V / 0.83mA
flutuante

PAD: 266 - 1.68V / 0.02mA

PAD: 289 - 3.89V / 2.46mA

PAD: 389 - 3.89V / 2.46mA

PAD: 385 - 4.00V / 2.73mA

PAD: 382 - 4.02V / 2.76mA

PAD: 392 - 3.89V / 2.46mA

PAD: 397 - 0.00V / 0.00mA

PAD: 20 - 1.59V / 0.00mA

PAD: 18 - 1.64V / 0.00mA

PAD: 15 - 4.02V / 2.76mA

PADS: 5,7,9,11 - 0.00V / 0.00mA

PAD: 574 - 1.83V / 0.11mA

PAD: 570 - 1.49V / 0.00mA

PAD: 291 - 2.89V / 1.33A

PAD: 293 - 2.89V / 1.33A

PAD: 291 - 2.98V / 1.43mA

PAD: 293 - 2.86V / 1.28mA

PAD: 312 - 1.74V / 0.04mA

PAD: 318 - 2.85V / 1.26mA

PAD: 338 - 1.61V / 0.00mA

PAD: 439 - 1.61V / 0.00mA

PAD: 401 - 4.02V / 2.76mA

PAD: 433 - 4.02V / 2.76mA

PAD: 413 - 4.02V / 2.76mA

PAD: 419 - 3.00V / 1.49mA flutuante

PAD: 417 - 2.81V / 1.25mA flutuante

PAD: 414 - 1.64V / 0.00mA

PAD: 407 - 1.42V / 0.00mA

PAD: 404 - 0.00V / 0.00mA